# 1. 水泵設計流程

改为水缸容量

另加 ” 水缸設計深度”

(默认 16m )

即每小时水泵的总排水量，默认值: $2m^3/s$ 。

该参数可不设置，如需设置，建议默认取2。

（见PPT第2页）

1. 输入 “设计水缸容量” (默认 $75000m^3$ )

↓

2. 输入 ” 水缸設計深度” (默认 16m )

↓

3. 水泵运行要求 (默认總流量 $2m^3/s$)

↓

4. 由AI根据指定的产品目录自动选取合适的水泵

# 2. 水泵操作设定

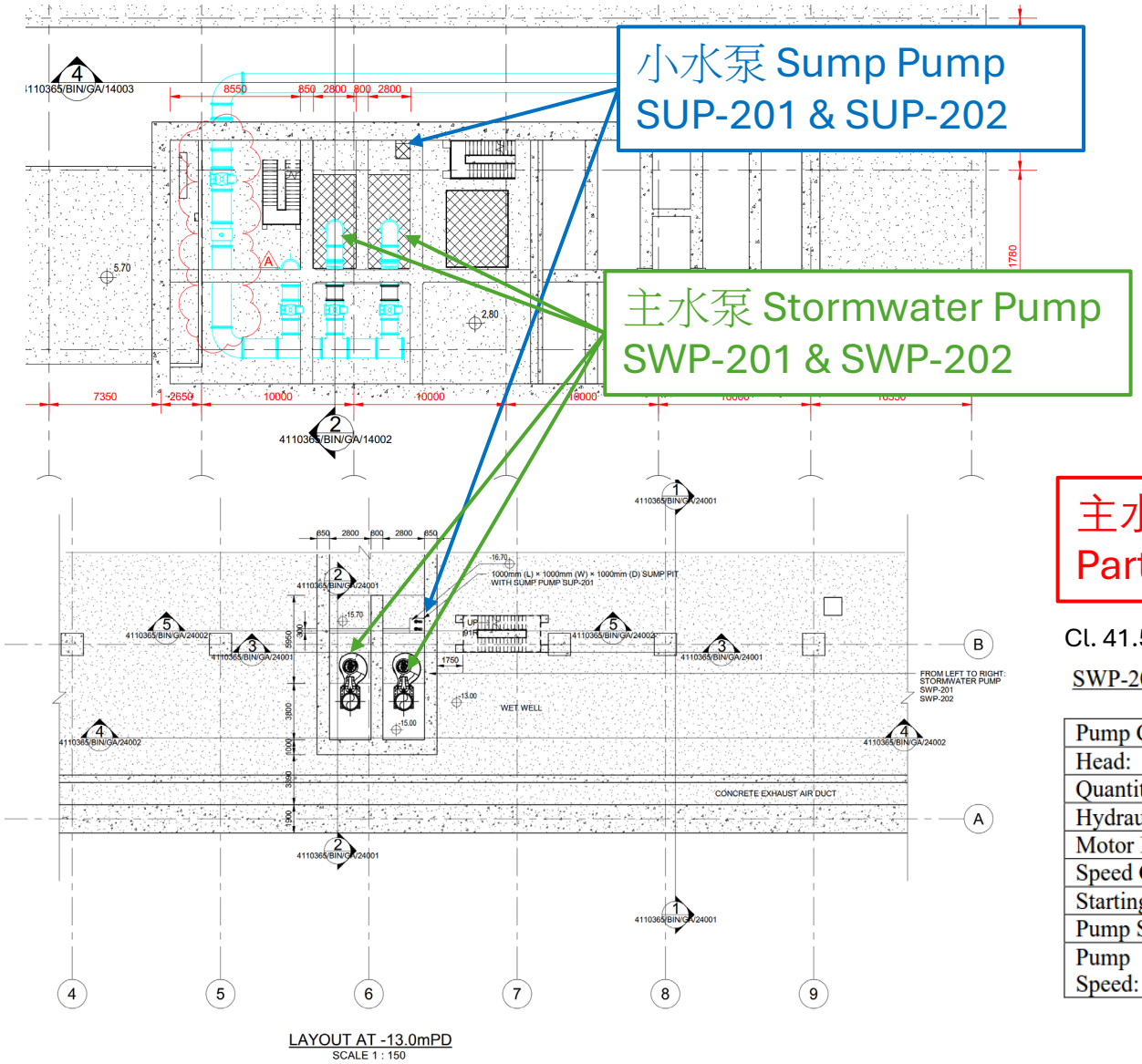


## 小水泵技术要求
## Particular Specification Clause 41.57

Cl. 41.57 (1) (d) The pumps for Argyle Street Playground Stormwater Storage Scheme (SUP-201 and SUP-202) are required to deliver not less than 15 $L/_s$ against 27m head when operating in 1 Duty + 1 Standby mode.

Cl. 43.15 (1) (ci) Sump Pump SUP-201

The control of sump pump shall follow the hierarchy below:

1) Pump shall not start without manual input.
2) Pump shall automatically stop and shall not start when water level reaches -15.7mPD

## 主水泵技术要求
## Particular Specification Clause 41.56

Cl. 41.56 (2) (c)

SWP-201 and SWP-202

| | |
|---|---|
| Pump Capacity: | Each 1500 L/s |
| Head: | 16m at 1500 L/s |
| Quantity: | 2 nos. (1 Duty and 1 Standby) |
| Hydraulic Efficiency: | Not less than 82% at the duty point |
| Motor Efficiency: | Not less than 93% at the duty point |
| Speed Control: | Variable speed |
| Starting Method: | Variable speed drive |
| Pump Starts Per Hour: | 8 or more |
| Pump and Motor Rated Speed: | Less than 1000 RPM |

Cl. 43.15 (1) (ci)

Stormwater Pumps SWP-201 and SWP-202 and Argyle Street Playground Stormwater Storage Tank

| Alarm | Water Level (mPD) |
|---|---|
| Low Water Level | -13.5 |
| High Water Level | -1.0 |
| Maximum Water Level | +1.2 |

| Pump Operation | Water Level (mPD) |
|---|---|
| 1st Pump Start | -6.0 |
| 2nd Pump Start | -1.0 |
| Pump Stop Level | -13.0 |

# 3. 指定的水泵产品目录

**Amarex KRT –**
**Submersible Motor Pump**

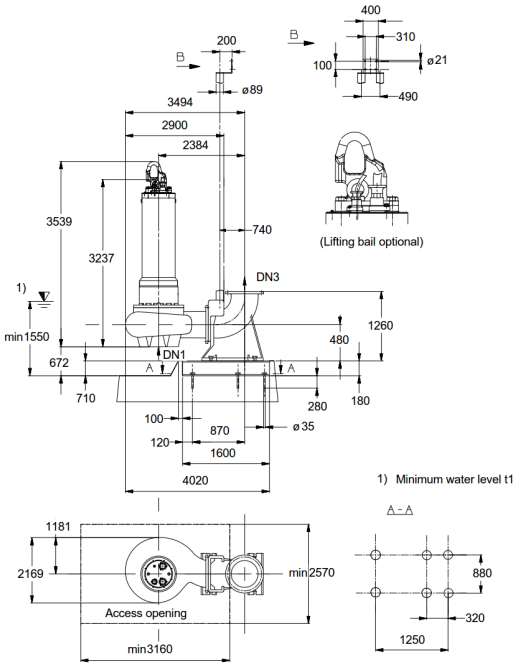


**KRTK 700-902/31010UNG1-S** Version no.: 1

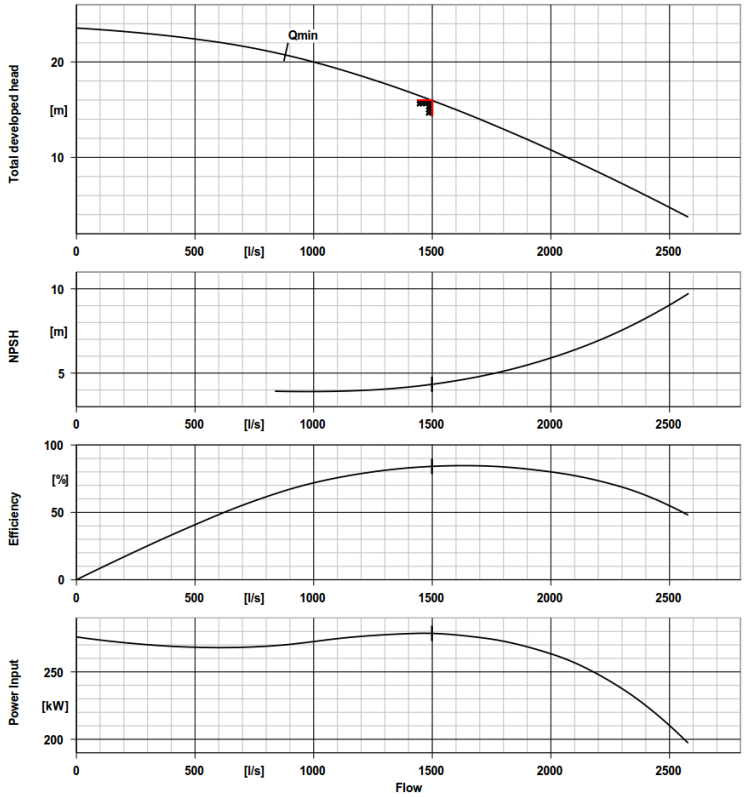


**Curve data**

| | | | |
|---|---|---|---|
| Speed of rotation | 595 rpm | Efficiency | 84.2 % |
| Fluid density | 998 kg/m³ | Power absorbed | 278.41 kW |
| Viscosity | 1.00 mm²/s | NPSH 3% | 4.33 m |
| Flow rate | 1498.780 l/s | Curve number | K43572/0 |
| Requested flow rate | 1500.000 l/s | Effective impeller diameter | 742.0 mm |
| Total developed head | 15.97 m | Acceptance standard | ISO 9906 2B |
| Requested developed head | 16.00 m | | |

## 用于水缸的潜水电机泵

电机泵型号选型（对比4种型号）：

- 型号1：KRTK 700-902/31010UNG1-S
- 型号2：KRTK 400-500/4010UNG1-S
- 型号3：KRTF 50-216/112UEG1-S
- 型号4：KRTF 50-216/24UEG1-P

AI选型依据

- 扬程（即水池深度）
- 必需汽蚀余量（NPSH）（可暂不考虑？）
- 效率（设定下限，不低于82%，按规范要求）
- - 输入功率（可暂不考虑？）